Computer Architecture

CE/CS 321/330

L2

Course Teacher: Dr.-Ing. Shehzad Hasan

Lecture: 29 + Quiz

Cache Optimizations

- Small & Simple first level caches to reduce hit time
  - Small cache can help hit time since smaller memory takes less time to index
  - Simple – direct mapping
    - Can overlap tag check with data transmission since there is no choice

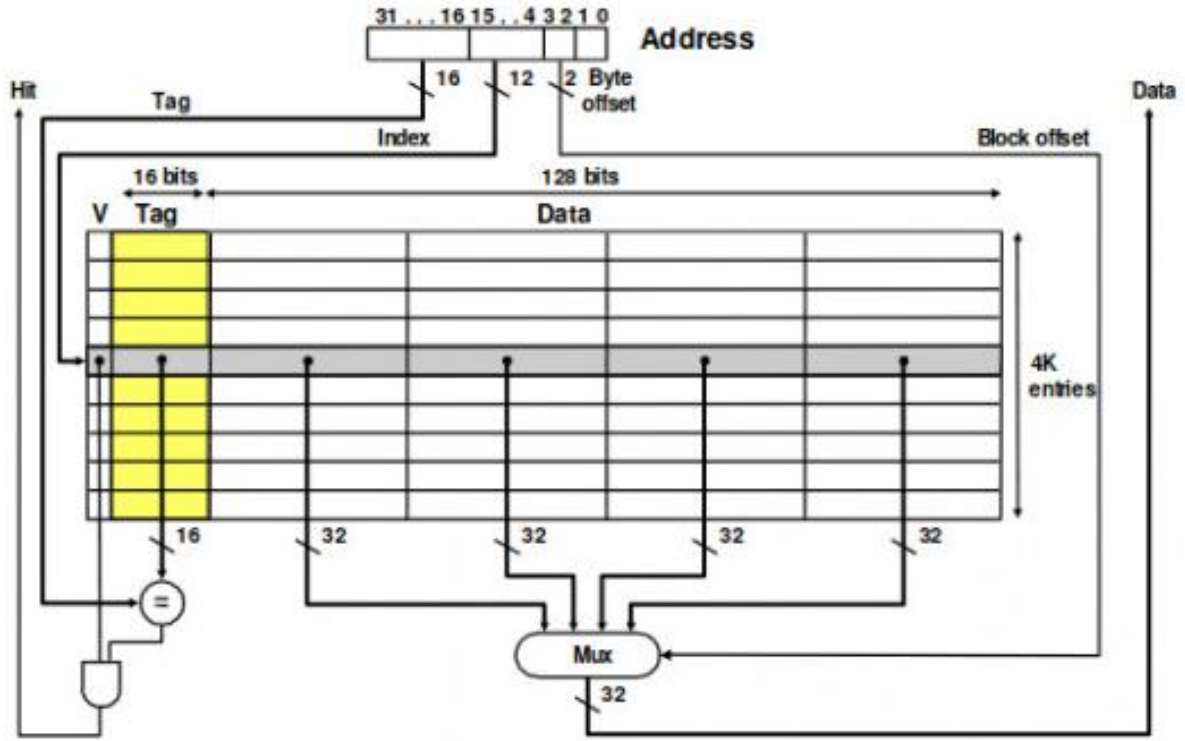

  - Lower associativity also reduces power because fewer cache lines are accessed

Memory Hierarchy

- Four Memory Hierarchy Questions
  - Q1: Where can a block be placed in the upper level? (block placement)
  - Q2: How is a block found if it is in the upper level? (block identification)
  - Q3: Which block should be replaced on a miss? (block replacement)
  - Q4: What happens on a write? (write strategy)

Cache Write Policy

- What happens on a write?

  There are two basic options when writing to the cache:

  – Write-through
    - The information is written to both the block in the cache and to the block in the lower-level memory.

  – Write-back
    - The information is written only to the block in the cache. The modified cache block is written to main memory only when it is replaced.
    - To mark that a block has been changed by the processor after the write operation, each cache line has an associated dirty (modified) bit as well.
    - When the block is selected for replacement we check the dirty bit, if it has been modified then we copy the block otherwise we simply overwrite it.

Handling Cache Write Miss

- What happens on a write?
  - When the processor must wait for writes to complete during write-through or in write-back (block replacement of a dirty block), the processor is said to *write stall*.
  - A common optimization to reduce write stalls is a *write buffer*, which allows the processor to continue as soon as the data are written to the buffer, thereby overlapping processor execution with memory updating.
    - If the rate at which the memory can complete writes is less than the rate at which the processor is generating writes, no amount of buffering can help, because writes are being generated faster than the memory system can accept them.
    - When writes occur in bursts, to reduce stalls, processors usually increase the depth of the write buffer beyond a single entry and do one big write as a single transfer.

Computer Architecture

CE/CS 321/330

L2

Course Teacher: Dr.-Ing. Shehzad Hasan

Lecture: 30

Handling Cache Write Miss

- What happens on a write miss?

  There are two options if the block to write on is not in the cache

  - Write allocate
    - The block is loaded into the cache (allocation) on a write miss, then
    - The write is performed in the cache.
    - Good when there is write locality (writes likely to the same block again)
    - This works best with write-back caches
  - No-write allocate
    - Write misses do not affect the cache. Instead, the block is modified only in the lower-level memory.
    - Avoids bringing blocks into cache that may never be reused.
    - Works well when writes have poor temporal locality (streaming writes)

Storing Arrays

C language always store the standard multidimensional arrays in row major order

- 1D Array

  char A[10];

009	A[9]
008	A[8]
007	A[7]
006	A[6]
005	A[5]
004	A[4]
003	A[3]
002	A[2]
001	A[1]
000	A[0]

- 2D Array

  char B[3][3];

009	
008	B[2][2]
007	B[2][1]
006	B[2][0]
005	B[1][2]
004	B[1][1]
003	B[1][0]
002	B[0][2]
001	B[0][1]
000	B[0][0]

Row major order

009	
008	B[2][2]
007	B[1][2]
006	B[0][2]
005	B[2][1]
004	B[1][1]
003	B[0][1]
002	B[2][0]
001	B[1][0]
000	B[0][0]

Column major order

Matrix Multiplication

- Multiple arrays – with some arrays accessed by rows and some by columns.

X = Y x Z

```
for (i = 0; i < N; i = i+1)
        for (j = 0; j < N; j = j+1)
        {       r = 0;
                for (k = 0; k < N; k = k + 1)
                        r = r + Y[i][k] * Z[k][j];
                X[i][j] = r;
        }
```

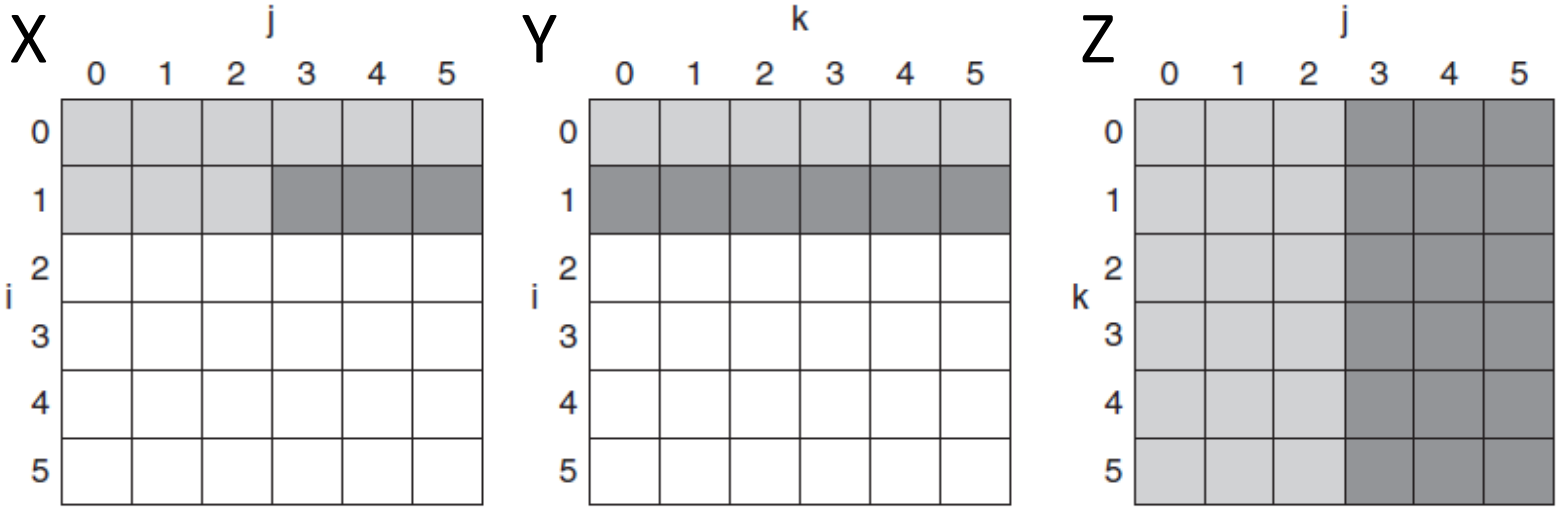

Matrix Multiplication

- Suppose a direct mapped cache with 4 lines and a block size of 2 bytes
- Determine the number of hits with
  - Write-allocate
  - No write-allocate

$$\begin{bmatrix} x_{00} & x_{01} \\ x_{10} & x_{11} \end{bmatrix} = \begin{bmatrix} 3 & 7 \\ 8 & 9 \end{bmatrix} \times \begin{bmatrix} 6 & 5 \\ 2 & 1 \end{bmatrix}$$

	Tag	Line	
00			
01			
10			
11			

1011	X[1][1]
1010	X[1][0]
1001	X[0][1]
1000	X[0][0]
0111	Z[1][1]
0110	Z[1][0]
0101	Z[0][1]
0100	Z[0][0]
0011	Y[1][1]
0010	Y[1][0]
0001	Y[0][1]
0000	Y[0][0]

```
int N = 2;
char Y[N][N];
char Z[N][N];
char X[N][N];

Y[0][0] = 3; Y[0][1] = 7; Y[1][0] = 8; Y[1][1] = 9;
Z[0][0] = 6; Z[0][1] = 5; Z[1][0] = 2; Z[1][1] = 1;

for (i = 0; i < N; i = i+1)
        for (j = 0; j < N; j = j+1)
        {       r = 0;
                for (k = 0; k < N; k = k + 1)
                        r = r + Y[i][k]*Z[k][j];
                X[i][j] = r;
        }
```

1	2	3	4	5	6	7	8	9	10	11	12	13	14	15	16	17	18	19	20

Matrix Multiplication

- Determine the number of hits with
  - Write-allocate

$$\begin{bmatrix} x_{00} & x_{01} \\ x_{10} & x_{11} \end{bmatrix} = \begin{bmatrix} 3 & 7 \\ 8 & 9 \end{bmatrix} \times \begin{bmatrix} 6 & 5 \\ 2 & 1 \end{bmatrix}$$

	Tag	Line	
00	0	3	7
01			
10			
11			

1011	X[1][1]
1010	X[1][0]
1001	X[0][1]
1000	X[0][0]
0111	Z[1][1]
0110	Z[1][0]
0101	Z[0][1]
0100	Z[0][0]
0011	Y[1][1]
0010	Y[1][0]
0001	Y[0][1]
0000	Y[0][0]

```
int N = 2;
char Y[N][N];
char Z[N][N];
char X[N][N];

Y[0][0] = 3; Y[0][1] = 7; Y[1][0] = 8; Y[1][1] = 9;
Z[0][0] = 6; Z[0][1] = 5; Z[1][0] = 2; Z[1][1] = 1;

for (i = 0; i < N; i = i+1)
        for (j = 0; j < N; j = j+1)
        {       r = 0;
                for (k = 0; k < N; k = k + 1)
                        r = r + Y[i][k]*Z[k][j];
                X[i][j] = r;
        }
```

1	2	3	4	5	6	7	8	9	10	11	12	13	14	15	16	17	18	19	20
M																			

Matrix Multiplication

- Determine the number of hits with
  - Write-allocate

$$\begin{bmatrix} x_{00} & x_{01} \\ x_{10} & x_{11} \end{bmatrix} = \begin{bmatrix} 3 & 7 \\ 8 & 9 \end{bmatrix} \times \begin{bmatrix} 6 & 5 \\ 2 & 1 \end{bmatrix}$$

	Tag	Line	
00	0	3	7
01			
10	0	6	5
11			

1011	X[1][1]
1010	X[1][0]
1001	X[0][1]
1000	X[0][0]
0111	Z[1][1]
0110	Z[1][0]
0101	Z[0][1]
0100	Z[0][0]
0011	Y[1][1]
0010	Y[1][0]
0001	Y[0][1]
0000	Y[0][0]

```
int N = 2;
char Y[N][N];
char Z[N][N];
char X[N][N];

Y[0][0] = 3; Y[0][1] = 7; Y[1][0] = 8; Y[1][1] = 9;
Z[0][0] = 6; Z[0][1] = 5; Z[1][0] = 2; Z[1][1] = 1;

for (i = 0; i < N; i = i+1)
        for (j = 0; j < N; j = j+1)
        {       r = 0;
                for (k = 0; k < N; k = k + 1)
                        r = r + Y[i][k]*Z[k][j];
                X[i][j] = r;
        }
```

1	2	3	4	5	6	7	8	9	10	11	12	13	14	15	16	17	18	19	20
M	M																		

Matrix Multiplication

- Determine the number of hits with
  - Write-allocate

$$\begin{bmatrix} x_{00} & x_{01} \\ x_{10} & x_{11} \end{bmatrix} = \begin{bmatrix} 3 & 7 \\ 8 & 9 \end{bmatrix} \times \begin{bmatrix} 6 & 5 \\ 2 & 1 \end{bmatrix}$$

	Tag	Line	
00	0	3	7
01			
10	0	6	5
11	0	2	1

1011	X[1][1]
1010	X[1][0]
1001	X[0][1]
1000	X[0][0]
0111	Z[1][1]
0110	Z[1][0]
0101	Z[0][1]
0100	Z[0][0]
0011	Y[1][1]
0010	Y[1][0]
0001	Y[0][1]
0000	Y[0][0]

```
int N = 2;
char Y[N][N];
char Z[N][N];
char X[N][N];

Y[0][0] = 3; Y[0][1] = 7; Y[1][0] = 8; Y[1][1] = 9;
Z[0][0] = 6; Z[0][1] = 5; Z[1][0] = 2; Z[1][1] = 1;

for (i = 0; i < N; i = i+1)
        for (j = 0; j < N; j = j+1)
        {       r = 0;
                for (k = 0; k < N; k = k + 1)
                        r = r + Y[i][k]*Z[k][j];
                X[i][j] = r;
        }
```

1	2	3	4	5	6	7	8	9	10	11	12	13	14	15	16	17	18	19	20
M	M	H	M																

Matrix Multiplication

- Determine the number of hits with
  - Write-allocate

$$\begin{bmatrix} x_{00} & x_{01} \\ x_{10} & x_{11} \end{bmatrix} = \begin{bmatrix} 3 & 7 \\ 8 & 9 \end{bmatrix} \times \begin{bmatrix} 6 & 5 \\ 2 & 1 \end{bmatrix}$$

	Tag	Line	
00	1	x00	x01
01			
10	0	6	5
11	0	2	1

1011	X[1][1]
1010	X[1][0]
1001	X[0][1]
1000	X[0][0]
0111	Z[1][1]
0110	Z[1][0]
0101	Z[0][1]
0100	Z[0][0]
0011	Y[1][1]
0010	Y[1][0]
0001	Y[0][1]
0000	Y[0][0]

```
int N = 2;
char Y[N][N];
char Z[N][N];
char X[N][N];

Y[0][0] = 3; Y[0][1] = 7; Y[1][0] = 8; Y[1][1] = 9;
Z[0][0] = 6; Z[0][1] = 5; Z[1][0] = 2; Z[1][1] = 1;

for (i = 0; i < N; i = i+1)
        for (j = 0; j < N; j = j+1)
        {       r = 0;
                for (k = 0; k < N; k = k + 1)
                        r = r + Y[i][k]*Z[k][j];
                X[i][j] = r;
        }
```

1	2	3	4	5	6	7	8	9	10	11	12	13	14	15	16	17	18	19	20
M	M	H	M	M															

Matrix Multiplication

- Determine the number of hits with
  - Write-allocate

$$\begin{bmatrix} x_{00} & x_{01} \\ x_{10} & x_{11} \end{bmatrix} = \begin{bmatrix} 3 & 7 \\ 8 & 9 \end{bmatrix} \times \begin{bmatrix} 6 & 5 \\ 2 & 1 \end{bmatrix}$$

	Tag	Line	
00	1	32	x01
01			
10	0	6	5
11	0	2	1

1011	X[1][1]
1010	X[1][0]
1001	X[0][1]
1000	X[0][0]
0111	Z[1][1]
0110	Z[1][0]
0101	Z[0][1]
0100	Z[0][0]
0011	Y[1][1]
0010	Y[1][0]
0001	Y[0][1]
0000	Y[0][0]

```
int N = 2;
char Y[N][N];
char Z[N][N];
char X[N][N];

Y[0][0] = 3; Y[0][1] = 7; Y[1][0] = 8; Y[1][1] = 9;
Z[0][0] = 6; Z[0][1] = 5; Z[1][0] = 2; Z[1][1] = 1;

for (i = 0; i < N; i = i+1)
        for (j = 0; j < N; j = j+1)
        {       r = 0;
                for (k = 0; k < N; k = k + 1)
                        r = r + Y[i][k]*Z[k][j];
                X[i][j] = r;
        }
```

1	2	3	4	5	6	7	8	9	10	11	12	13	14	15	16	17	18	19	20
M	M	H	M	M															

Matrix Multiplication

- Determine the number of hits with
  - Write-allocate

$$\begin{bmatrix} 32 & x_{01} \\ x_{10} & x_{11} \end{bmatrix} = \begin{bmatrix} 3 & 7 \\ 8 & 9 \end{bmatrix} \times \begin{bmatrix} 6 & 5 \\ 2 & 1 \end{bmatrix}$$

	Tag	Line	
00	0	3	7
01			
10	0	6	5
11	0	2	1

1011	X[1][1]
1010	X[1][0]
1001	X[0][1]
1000	X[0][0]
0111	Z[1][1]
0110	Z[1][0]
0101	Z[0][1]
0100	Z[0][0]
0011	Y[1][1]
0010	Y[1][0]
0001	Y[0][1]
0000	Y[0][0]

```
int N = 2;
char Y[N][N];
char Z[N][N];
char X[N][N];

Y[0][0] = 3; Y[0][1] = 7; Y[1][0] = 8; Y[1][1] = 9;
Z[0][0] = 6; Z[0][1] = 5; Z[1][0] = 2; Z[1][1] = 1;

for (i = 0; i < N; i = i+1)
        for (j = 0; j < N; j = j+1)
        {       r = 0;
                for (k = 0; k < N; k = k + 1)
                        r = r + Y[i][k]*Z[k][j];
                X[i][j] = r;
        }
```

1	2	3	4	5	6	7	8	9	10	11	12	13	14	15	16	17	18	19	20
M	M	H	M	M	M														

Matrix Multiplication

- Determine the number of hits with
  - Write-allocate

$$\begin{bmatrix} 32 & x_{01} \\ x_{10} & x_{11} \end{bmatrix} = \begin{bmatrix} 3 & 7 \\ 8 & 9 \end{bmatrix} \times \begin{bmatrix} 6 & 5 \\ 2 & 1 \end{bmatrix}$$

	Tag	Line	
00	0	3	7
01			
10	0	6	5
11	0	2	1

1011	X[1][1]
1010	X[1][0]
1001	X[0][1]
1000	X[0][0]
0111	Z[1][1]
0110	Z[1][0]
0101	Z[0][1]
0100	Z[0][0]
0011	Y[1][1]
0010	Y[1][0]
0001	Y[0][1]
0000	Y[0][0]

```
int N = 2;
char Y[N][N];
char Z[N][N];
char X[N][N];

Y[0][0] = 3; Y[0][1] = 7; Y[1][0] = 8; Y[1][1] = 9;
Z[0][0] = 6; Z[0][1] = 5; Z[1][0] = 2; Z[1][1] = 1;

for (i = 0; i < N; i = i+1)
        for (j = 0; j < N; j = j+1)
        {       r = 0;
                for (k = 0; k < N; k = k + 1)
                        r = r + Y[i][k]*Z[k][j];
                X[i][j] = r;
        }
```

1	2	3	4	5	6	7	8	9	10	11	12	13	14	15	16	17	18	19	20
M	M	H	M	M	M	H													

Matrix Multiplication

- Determine the number of hits with
  - Write-allocate

$$\begin{bmatrix} 32 & x_{01} \\ x_{10} & x_{11} \end{bmatrix} = \begin{bmatrix} 3 & 7 \\ 8 & 9 \end{bmatrix} \times \begin{bmatrix} 6 & 5 \\ 2 & 1 \end{bmatrix}$$

	Tag	Line	
00	0	3	7
01			
10	0	6	5
11	0	2	1

1011	X[1][1]
1010	X[1][0]
1001	X[0][1]
1000	X[0][0]
0111	Z[1][1]
0110	Z[1][0]
0101	Z[0][1]
0100	Z[0][0]
0011	Y[1][1]
0010	Y[1][0]
0001	Y[0][1]
0000	Y[0][0]

```
int N = 2;
char Y[N][N];
char Z[N][N];
char X[N][N];

Y[0][0] = 3; Y[0][1] = 7; Y[1][0] = 8; Y[1][1] = 9;
Z[0][0] = 6; Z[0][1] = 5; Z[1][0] = 2; Z[1][1] = 1;

for (i = 0; i < N; i = i+1)
        for (j = 0; j < N; j = j+1)
        {       r = 0;
                for (k = 0; k < N; k = k + 1)
                        r = r + Y[i][k]*Z[k][j];
                X[i][j] = r;
        }
```

1	2	3	4	5	6	7	8	9	10	11	12	13	14	15	16	17	18	19	20
M	M	H	M	M	M	H	H	H											

Matrix Multiplication

- Determine the number of hits with
  - Write-allocate

$$\begin{bmatrix} 32 & x_{01} \\ x_{10} & x_{11} \end{bmatrix} = \begin{bmatrix} 3 & 7 \\ 8 & 9 \end{bmatrix} \times \begin{bmatrix} 6 & 5 \\ 2 & 1 \end{bmatrix}$$

	Tag	Line	
00	1	32	x01
01			
10	0	6	5
11	0	2	1

1011	X[1][1]
1010	X[1][0]
1001	X[0][1]
1000	X[0][0]
0111	Z[1][1]
0110	Z[1][0]
0101	Z[0][1]
0100	Z[0][0]
0011	Y[1][1]
0010	Y[1][0]
0001	Y[0][1]
0000	Y[0][0]

```
int N = 2;
char Y[N][N];
char Z[N][N];
char X[N][N];

Y[0][0] = 3; Y[0][1] = 7; Y[1][0] = 8; Y[1][1] = 9;
Z[0][0] = 6; Z[0][1] = 5; Z[1][0] = 2; Z[1][1] = 1;

for (i = 0; i < N; i = i+1)
        for (j = 0; j < N; j = j+1)
        {       r = 0;
                for (k = 0; k < N; k = k + 1)
                        r = r + Y[i][k]*Z[k][j];
                X[i][j] = r;
        }
```

1	2	3	4	5	6	7	8	9	10	11	12	13	14	15	16	17	18	19	20
M	M	H	M	M	M	H	H	H	M										

Matrix Multiplication

- Determine the number of hits with
  - Write-allocate

$$\begin{bmatrix} 32 & x_{01} \\ x_{10} & x_{11} \end{bmatrix} = \begin{bmatrix} 3 & 7 \\ 8 & 9 \end{bmatrix} \times \begin{bmatrix} 6 & 5 \\ 2 & 1 \end{bmatrix}$$

	Tag	Line	
00	1	32	22
01			
10	0	6	5
11	0	2	1

1011	X[1][1]
1010	X[1][0]
1001	X[0][1]
1000	X[0][0]
0111	Z[1][1]
0110	Z[1][0]
0101	Z[0][1]
0100	Z[0][0]
0011	Y[1][1]
0010	Y[1][0]
0001	Y[0][1]
0000	Y[0][0]

```
int N = 2;
char Y[N][N];
char Z[N][N];
char X[N][N];

Y[0][0] = 3; Y[0][1] = 7; Y[1][0] = 8; Y[1][1] = 9;
Z[0][0] = 6; Z[0][1] = 5; Z[1][0] = 2; Z[1][1] = 1;

for (i = 0; i < N; i = i+1)
        for (j = 0; j < N; j = j+1)
        {       r = 0;
                for (k = 0; k < N; k = k + 1)
                        r = r + Y[i][k]*Z[k][j];
                X[i][j] = r;
        }
```

1	2	3	4	5	6	7	8	9	10	11	12	13	14	15	16	17	18	19	20
M	M	H	M	M	M	H	H	H	M										

Matrix Multiplication

- Determine the number of hits with
  - Write-allocate

$$\begin{bmatrix} 32 & x_{01} \\ x_{10} & x_{11} \end{bmatrix} = \begin{bmatrix} 3 & 7 \\ 8 & 9 \end{bmatrix} \times \begin{bmatrix} 6 & 5 \\ 2 & 1 \end{bmatrix}$$

	Tag	Line	
00	1	32	22
01	0	8	9
10	0	6	5
11	0	2	1

1011	X[1][1]
1010	X[1][0]
1001	X[0][1]
1000	X[0][0]
0111	Z[1][1]
0110	Z[1][0]
0101	Z[0][1]
0100	Z[0][0]
0011	Y[1][1]
0010	Y[1][0]
0001	Y[0][1]
0000	Y[0][0]

```
int N = 2;
char Y[N][N];
char Z[N][N];
char X[N][N];

Y[0][0] = 3; Y[0][1] = 7; Y[1][0] = 8; Y[1][1] = 9;
Z[0][0] = 6; Z[0][1] = 5; Z[1][0] = 2; Z[1][1] = 1;

for (i = 0; i < N; i = i+1)
        for (j = 0; j < N; j = j+1)
        {       r = 0;
                for (k = 0; k < N; k = k + 1)
                        r = r + Y[i][k]*Z[k][j];
                X[i][j] = r;
        }
```

1	2	3	4	5	6	7	8	9	10	11	12	13	14	15	16	17	18	19	20
M	M	H	M	M	M	H	H	H	M	M	H								

Matrix Multiplication

- Determine the number of hits with
  - Write-allocate

$$\begin{bmatrix} 32 & x_{01} \\ x_{10} & x_{11} \end{bmatrix} = \begin{bmatrix} 3 & 7 \\ 8 & 9 \end{bmatrix} \times \begin{bmatrix} 6 & 5 \\ 2 & 1 \end{bmatrix}$$

	Tag	Line	
00	1	32	22
01	0	8	9
10	0	6	5
11	0	2	1

1011	X[1][1]
1010	X[1][0]
1001	X[0][1]
1000	X[0][0]
0111	Z[1][1]
0110	Z[1][0]
0101	Z[0][1]
0100	Z[0][0]
0011	Y[1][1]
0010	Y[1][0]
0001	Y[0][1]
0000	Y[0][0]

```
int N = 2;
char Y[N][N];
char Z[N][N];
char X[N][N];

Y[0][0] = 3; Y[0][1] = 7; Y[1][0] = 8; Y[1][1] = 9;
Z[0][0] = 6; Z[0][1] = 5; Z[1][0] = 2; Z[1][1] = 1;

for (i = 0; i < N; i = i+1)
        for (j = 0; j < N; j = j+1)
        {       r = 0;
                for (k = 0; k < N; k = k + 1)
                        r = r + Y[i][k]*Z[k][j];
                X[i][j] = r;
        }
```

1	2	3	4	5	6	7	8	9	10	11	12	13	14	15	16	17	18	19	20
M	M	H	M	M	M	H	H	H	M	M	H	H	H						

Matrix Multiplication

- Determine the number of hits with
  - Write-allocate

$$\begin{bmatrix} 32 & x_{01} \\ x_{10} & x_{11} \end{bmatrix} = \begin{bmatrix} 3 & 7 \\ 8 & 9 \end{bmatrix} \times \begin{bmatrix} 6 & 5 \\ 2 & 1 \end{bmatrix}$$

	Tag	Line	
00	1	32	22
01	0	8	9
10	0	6	5
11	0	2	1

1011	X[1][1]
1010	X[1][0]
1001	X[0][1]
1000	X[0][0]
0111	Z[1][1]
0110	Z[1][0]
0101	Z[0][1]
0100	Z[0][0]
0011	Y[1][1]
0010	Y[1][0]
0001	Y[0][1]
0000	Y[0][0]

```
int N = 2;
char Y[N][N];
char Z[N][N];
char X[N][N];

Y[0][0] = 3; Y[0][1] = 7; Y[1][0] = 8; Y[1][1] = 9;
Z[0][0] = 6; Z[0][1] = 5; Z[1][0] = 2; Z[1][1] = 1;

for (i = 0; i < N; i = i+1)
        for (j = 0; j < N; j = j+1)
        {       r = 0;
                for (k = 0; k < N; k = k + 1)
                        r = r + Y[i][k]*Z[k][j];
                X[i][j] = r;
        }
```

1	2	3	4	5	6	7	8	9	10	11	12	13	14	15	16	17	18	19	20
M	M	H	M	M	M	H	H	H	M	M	H	H	H	M					

Matrix Multiplication

- Determine the number of hits with
  - Write-allocate

$$\begin{bmatrix} 32 & x_{01} \\ x_{10} & x_{11} \end{bmatrix} = \begin{bmatrix} 3 & 7 \\ 8 & 9 \end{bmatrix} \times \begin{bmatrix} 6 & 5 \\ 2 & 1 \end{bmatrix}$$

	Tag	Line	
00	1	32	22
01	1	x10	x11
10	0	6	5
11	0	2	1

1011	X[1][1]
1010	X[1][0]
1001	X[0][1]
1000	X[0][0]
0111	Z[1][1]
0110	Z[1][0]
0101	Z[0][1]
0100	Z[0][0]
0011	Y[1][1]
0010	Y[1][0]
0001	Y[0][1]
0000	Y[0][0]

```
int N = 2;
char Y[N][N];
char Z[N][N];
char X[N][N];

Y[0][0] = 3; Y[0][1] = 7; Y[1][0] = 8; Y[1][1] = 9;
Z[0][0] = 6; Z[0][1] = 5; Z[1][0] = 2; Z[1][1] = 1;

for (i = 0; i < N; i = i+1)
        for (j = 0; j < N; j = j+1)
        {       r = 0;
                for (k = 0; k < N; k = k + 1)
                        r = r + Y[i][k]*Z[k][j];
                X[i][j] = r;
        }
```

1	2	3	4	5	6	7	8	9	10	11	12	13	14	15	16	17	18	19	20
M	M	H	M	M	M	H	H	H	M	M	H	H	H	M					

Matrix Multiplication

- Determine the number of hits with
  - Write-allocate

$$\begin{bmatrix} 32 & x_{01} \\ x_{10} & x_{11} \end{bmatrix} = \begin{bmatrix} 3 & 7 \\ 8 & 9 \end{bmatrix} \times \begin{bmatrix} 6 & 5 \\ 2 & 1 \end{bmatrix}$$

	Tag	Line	
00	1	32	22
01	1	66	x11
10	0	6	5
11	0	2	1

1011	X[1][1]
1010	X[1][0]
1001	X[0][1]
1000	X[0][0]
0111	Z[1][1]
0110	Z[1][0]
0101	Z[0][1]
0100	Z[0][0]
0011	Y[1][1]
0010	Y[1][0]
0001	Y[0][1]
0000	Y[0][0]

```
int N = 2;
char Y[N][N];
char Z[N][N];
char X[N][N];

Y[0][0] = 3; Y[0][1] = 7; Y[1][0] = 8; Y[1][1] = 9;
Z[0][0] = 6; Z[0][1] = 5; Z[1][0] = 2; Z[1][1] = 1;

for (i = 0; i < N; i = i+1)
        for (j = 0; j < N; j = j+1)
        {       r = 0;
                for (k = 0; k < N; k = k + 1)
                        r = r + Y[i][k]*Z[k][j];
                X[i][j] = r;
        }
```

1	2	3	4	5	6	7	8	9	10	11	12	13	14	15	16	17	18	19	20
M	M	H	M	M	M	H	H	H	M	M	H	H	H	M					

Matrix Multiplication

- Determine the number of hits with
  - Write-allocate

$$\begin{bmatrix} 32 & x_{01} \\ x_{10} & x_{11} \end{bmatrix} = \begin{bmatrix} 3 & 7 \\ 8 & 9 \end{bmatrix} \times \begin{bmatrix} 6 & 5 \\ 2 & 1 \end{bmatrix}$$

	Tag	Line	
00	1	32	22
01	1	66	x11
10	0	6	5
11	0	2	1

1011	X[1][1]
1010	X[1][0]
1001	X[0][1]
1000	X[0][0]
0111	Z[1][1]
0110	Z[1][0]
0101	Z[0][1]
0100	Z[0][0]
0011	Y[1][1]
0010	Y[1][0]
0001	Y[0][1]
0000	Y[0][0]

```
int N = 2;
char Y[N][N];
char Z[N][N];
char X[N][N];

Y[0][0] = 3; Y[0][1] = 7; Y[1][0] = 8; Y[1][1] = 9;
Z[0][0] = 6; Z[0][1] = 5; Z[1][0] = 2; Z[1][1] = 1;

for (i = 0; i < N; i = i+1)
        for (j = 0; j < N; j = j+1)
        {       r = 0;
                for (k = 0; k < N; k = k + 1)
                        r = r + Y[i][k]*Z[k][j];
                X[i][j] = r;
        }
```

1	2	3	4	5	6	7	8	9	10	11	12	13	14	15	16	17	18	19	20
M	M	H	M	M	M	H	H	H	M	M	H	H	H	M	M				

Matrix Multiplication

- Determine the number of hits with
  - Write-allocate

$$\begin{bmatrix} 32 & x_{01} \\ 66 & x_{11} \end{bmatrix} = \begin{bmatrix} 3 & 7 \\ 8 & 9 \end{bmatrix} \times \begin{bmatrix} 6 & 5 \\ 2 & 1 \end{bmatrix}$$

	Tag	Line	
00	1	32	22
01	0	8	9
10	0	6	5
11	0	2	1

1011	X[1][1]
1010	X[1][0]
1001	X[0][1]
1000	X[0][0]
0111	Z[1][1]
0110	Z[1][0]
0101	Z[0][1]
0100	Z[0][0]
0011	Y[1][1]
0010	Y[1][0]
0001	Y[0][1]
0000	Y[0][0]

```
int N = 2;
char Y[N][N];
char Z[N][N];
char X[N][N];

Y[0][0] = 3; Y[0][1] = 7; Y[1][0] = 8; Y[1][1] = 9;
Z[0][0] = 6; Z[0][1] = 5; Z[1][0] = 2; Z[1][1] = 1;

for (i = 0; i < N; i = i+1)
        for (j = 0; j < N; j = j+1)
        {       r = 0;
                for (k = 0; k < N; k = k + 1)
                        r = r + Y[i][k]*Z[k][j];
                X[i][j] = r;
        }
```

1	2	3	4	5	6	7	8	9	10	11	12	13	14	15	16	17	18	19	20
M	M	H	M	M	M	H	H	H	M	M	H	H	H	M	M				

Matrix Multiplication

- Determine the number of hits with
  - Write-allocate

$$\begin{bmatrix} 32 & x_{01} \\ 66 & x_{11} \end{bmatrix} = \begin{bmatrix} 3 & 7 \\ 8 & 9 \end{bmatrix} \times \begin{bmatrix} 6 & 5 \\ 2 & 1 \end{bmatrix}$$

	Tag	Line	
00	1	32	22
01	0	8	9
10	0	6	5
11	0	2	1

1011	X[1][1]
1010	X[1][0]
1001	X[0][1]
1000	X[0][0]
0111	Z[1][1]
0110	Z[1][0]
0101	Z[0][1]
0100	Z[0][0]
0011	Y[1][1]
0010	Y[1][0]
0001	Y[0][1]
0000	Y[0][0]

```
int N = 2;
char Y[N][N];
char Z[N][N];
char X[N][N];

Y[0][0] = 3; Y[0][1] = 7; Y[1][0] = 8; Y[1][1] = 9;
Z[0][0] = 6; Z[0][1] = 5; Z[1][0] = 2; Z[1][1] = 1;

for (i = 0; i < N; i = i+1)
        for (j = 0; j < N; j = j+1)
        {       r = 0;
                for (k = 0; k < N; k = k + 1)
                        r = r + Y[i][k]*Z[k][j];
                X[i][j] = r;
        }
```

1	2	3	4	5	6	7	8	9	10	11	12	13	14	15	16	17	18	19	20
M	M	H	M	M	M	H	H	H	M	M	H	H	H	M	M	H			

Matrix Multiplication

- Determine the number of hits with
  - Write-allocate

$$\begin{bmatrix} 32 & x_{01} \\ 66 & x_{11} \end{bmatrix} = \begin{bmatrix} 3 & 7 \\ 8 & 9 \end{bmatrix} \times \begin{bmatrix} 6 & 5 \\ 2 & 1 \end{bmatrix}$$

	Tag	Line	
00	1	32	22
01	0	8	9
10	0	6	5
11	0	2	1

1011	X[1][1]
1010	X[1][0]
1001	X[0][1]
1000	X[0][0]
0111	Z[1][1]
0110	Z[1][0]
0101	Z[0][1]
0100	Z[0][0]
0011	Y[1][1]
0010	Y[1][0]
0001	Y[0][1]
0000	Y[0][0]

```
int N = 2;
char Y[N][N];
char Z[N][N];
char X[N][N];

Y[0][0] = 3; Y[0][1] = 7; Y[1][0] = 8; Y[1][1] = 9;
Z[0][0] = 6; Z[0][1] = 5; Z[1][0] = 2; Z[1][1] = 1;

for (i = 0; i < N; i = i+1)
        for (j = 0; j < N; j = j+1)
        {       r = 0;
                for (k = 0; k < N; k = k + 1)
                        r = r + Y[i][k]*Z[k][j];
                X[i][j] = r;
        }
```

1	2	3	4	5	6	7	8	9	10	11	12	13	14	15	16	17	18	19	20
M	M	H	M	M	M	H	H	H	M	M	H	H	H	M	M	H	H	H	

Matrix Multiplication

- Determine the number of hits with
  - Write-allocate

$$\begin{bmatrix} 32 & x_{01} \\ 66 & x_{11} \end{bmatrix} = \begin{bmatrix} 3 & 7 \\ 8 & 9 \end{bmatrix} \times \begin{bmatrix} 6 & 5 \\ 2 & 1 \end{bmatrix}$$

	Tag	Line	
00	1	32	22
01	0	8	9
10	0	6	5
11	0	2	1

1011	X[1][1]
1010	X[1][0]
1001	X[0][1]
1000	X[0][0]
0111	Z[1][1]
0110	Z[1][0]
0101	Z[0][1]
0100	Z[0][0]
0011	Y[1][1]
0010	Y[1][0]
0001	Y[0][1]
0000	Y[0][0]

```
int N = 2;
char Y[N][N];
char Z[N][N];
char X[N][N];

Y[0][0] = 3; Y[0][1] = 7; Y[1][0] = 8; Y[1][1] = 9;
Z[0][0] = 6; Z[0][1] = 5; Z[1][0] = 2; Z[1][1] = 1;

for (i = 0; i < N; i = i+1)
        for (j = 0; j < N; j = j+1)
        {       r = 0;
                for (k = 0; k < N; k = k + 1)
                        r = r + Y[i][k]*Z[k][j];
                X[i][j] = r;
        }
```

1	2	3	4	5	6	7	8	9	10	11	12	13	14	15	16	17	18	19	20
M	M	H	M	M	M	H	H	H	M	M	H	H	H	M	M	H	H	H	M

Matrix Multiplication

- Determine the number of hits with
  - Write-allocate

$$\begin{bmatrix} 32 & x_{01} \\ 66 & x_{11} \end{bmatrix} = \begin{bmatrix} 3 & 7 \\ 8 & 9 \end{bmatrix} \times \begin{bmatrix} 6 & 5 \\ 2 & 1 \end{bmatrix}$$

	Tag	Line	
00	1	32	22
01	1	66	x11
10	0	6	5
11	0	2	1

1011	X[1][1]
1010	X[1][0]
1001	X[0][1]
1000	X[0][0]
0111	Z[1][1]
0110	Z[1][0]
0101	Z[0][1]
0100	Z[0][0]
0011	Y[1][1]
0010	Y[1][0]
0001	Y[0][1]
0000	Y[0][0]

```
int N = 2;
char Y[N][N];
char Z[N][N];
char X[N][N];

Y[0][0] = 3; Y[0][1] = 7; Y[1][0] = 8; Y[1][1] = 9;
Z[0][0] = 6; Z[0][1] = 5; Z[1][0] = 2; Z[1][1] = 1;

for (i = 0; i < N; i = i+1)
        for (j = 0; j < N; j = j+1)
        {       r = 0;
                for (k = 0; k < N; k = k + 1)
                        r = r + Y[i][k]*Z[k][j];
                X[i][j] = r;
        }
```

1	2	3	4	5	6	7	8	9	10	11	12	13	14	15	16	17	18	19	20
M	M	H	M	M	M	H	H	H	M	M	H	H	H	M	M	H	H	H	M

Matrix Multiplication

- Determine the number of hits with
  - Write-allocate

$$\begin{bmatrix} 32 & x_{01} \\ 66 & x_{11} \end{bmatrix} = \begin{bmatrix} 3 & 7 \\ 8 & 9 \end{bmatrix} \times \begin{bmatrix} 6 & 5 \\ 2 & 1 \end{bmatrix}$$

	Tag	Line	
00	1	32	22
01	1	66	49
10	0	6	5
11	0	2	1

1011	X[1][1]
1010	X[1][0]
1001	X[0][1]
1000	X[0][0]
0111	Z[1][1]
0110	Z[1][0]
0101	Z[0][1]
0100	Z[0][0]
0011	Y[1][1]
0010	Y[1][0]
0001	Y[0][1]
0000	Y[0][0]

```
int N = 2;
char Y[N][N];
char Z[N][N];
char X[N][N];

Y[0][0] = 3; Y[0][1] = 7; Y[1][0] = 8; Y[1][1] = 9;
Z[0][0] = 6; Z[0][1] = 5; Z[1][0] = 2; Z[1][1] = 1;

for (i = 0; i < N; i = i+1)
        for (j = 0; j < N; j = j+1)
        {       r = 0;
                for (k = 0; k < N; k = k + 1)
                        r = r + Y[i][k]*Z[k][j];
                X[i][j] = r;
        }
```

Miss rate: 10/20 = 0.5

1	2	3	4	5	6	7	8	9	10	11	12	13	14	15	16	17	18	19	20
M	M	H	M	M	M	H	H	H	M	M	H	H	H	M	M	H	H	H	M

Matrix Multiplication

- Determine the number of hits with
  - No write-allocate

$$\begin{bmatrix} x_{00} & x_{01} \\ x_{10} & x_{11} \end{bmatrix} = \begin{bmatrix} 3 & 7 \\ 8 & 9 \end{bmatrix} \times \begin{bmatrix} 6 & 5 \\ 2 & 1 \end{bmatrix}$$

Do it yourself

011	X[1][1]
010	X[1][0]
009	X[0][1]
008	X[0][0]
007	Z[1][1]
006	Z[1][0]
005	Z[0][1]
004	Z[0][0]
003	Y[1][1]
002	Y[1][0]
001	Y[0][1]
000	Y[0][0]

```
int N = 2;
char Y[N][N];
char Z[N][N];
char X[N][N];

Y[0][0] = 3; Y[0][1] = 7; Y[1][0] = 8; Y[1][1] = 9;
Z[0][0] = 6; Z[0][1] = 5; Z[1][0] = 2; Z[1][1] = 1;

for (i = 0; i < N; i = i+1)
        for (j = 0; j < N; j = j+1)
        {       r = 0;
                for (k = 0; k < N; k = k + 1)
                        r = r + Y[i][k]*Z[k][j];
                X[i][j] = r;
        }
```